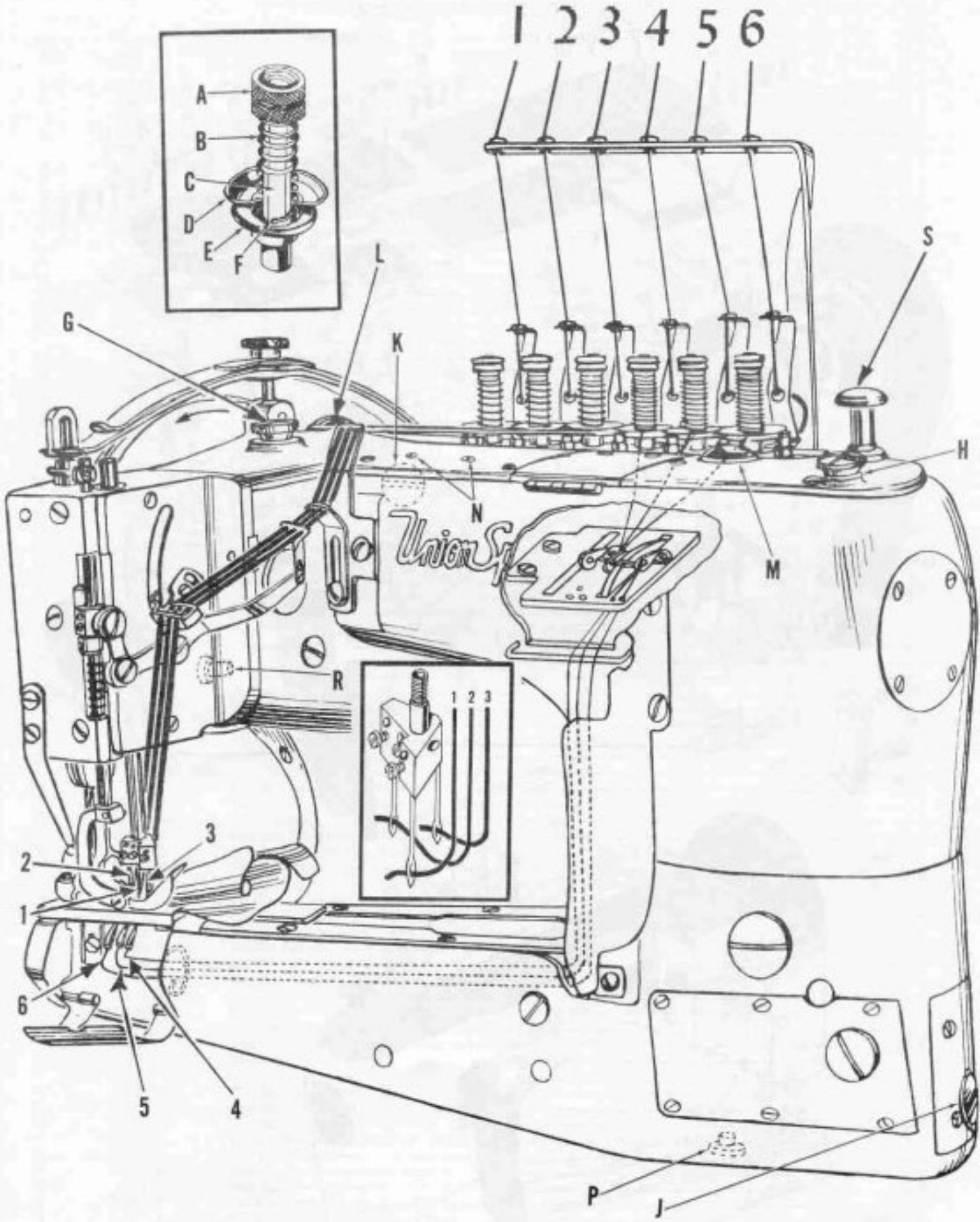

OILING AND THREADING DIAGRAM FOR STYLES [illegible] AND DR.

From the library of: Superior Sewing Machine & Supply LLC